Dominator
SCOOTER ACCESSORIES

RIDER'S MANUAL

- Read and understand this manual prior to riding your DSA scooter. Call DSA for assistance if needed.
- Note: Product illustrations are used for assembly purposes only.
  Actual product specifications are subject to change without notice.

SAFETY WARNING

MESSAGE TO PARENTS

This manual contains important information. For your child's safety, it is your responsibility to review this information with your child and make sure that your child understands all warnings, cautions, instructions and safety topics.
DSA recommends that from time to time you talk about the information in this manual with younger riders and that you are required to inspect and maintain your child's scooter to insure their safety.

GENERAL WARNING

Freestyle Scooter riding can be a hazardous activity. Performance scooters can and are intended to move and it is therefore possible to encounter dangerous situations and/or lose control or fall. If such actions occur you may be seriously injured or die.
AS WITH ANY MOVING PRODUCT, USING A SCOOTER CAN BE A DANGEROUS ACTIVITY AND MAY RESULT IN INJURY OR DEATH EVEN WHEN USED WITH PROPER PRECAUTIONS FOR RISK REDUCTION. RIDE AT YOUR OWN RISK AND USE COMMON SENSE.

WARNING

• Please read all enclosed materials including the safety manual before riding.
• Recommended for riders age 8+ and up to 220Lbs (100kg).
• Always wear safety equipment, helmet, knee pads, elbow pads and shoes.
• Adults must assist children in the assembly and adjustment of this scooter.
• Ride on smooth, paved surfaces away from motor vehicles and pedestrians.
• Do not ride on wet or sandy areas, avoid steep hills, drainage grates and sudden surface changes.
• Do not ride at night or in places with poor visibility.
• Brake will get hot, do not touch after use.
• Check and secure all components before every ride.
• Replace worn or broken parts immediately.
• Competent adult supervision recommended at all times.
• This scooter was manufactured for performance and durability but is not impervious to damage. Freestyle and trick riding can cause undue stress, fatigue or damage to any product. The rider assumes all risks and responsibilities when engaging in these types of activities.
• This scooter works optimally with its original parts. We do not advise removing or substituting for other parts, it may compromise the performance of the scooter.

KNOW YOUR SCOOTER

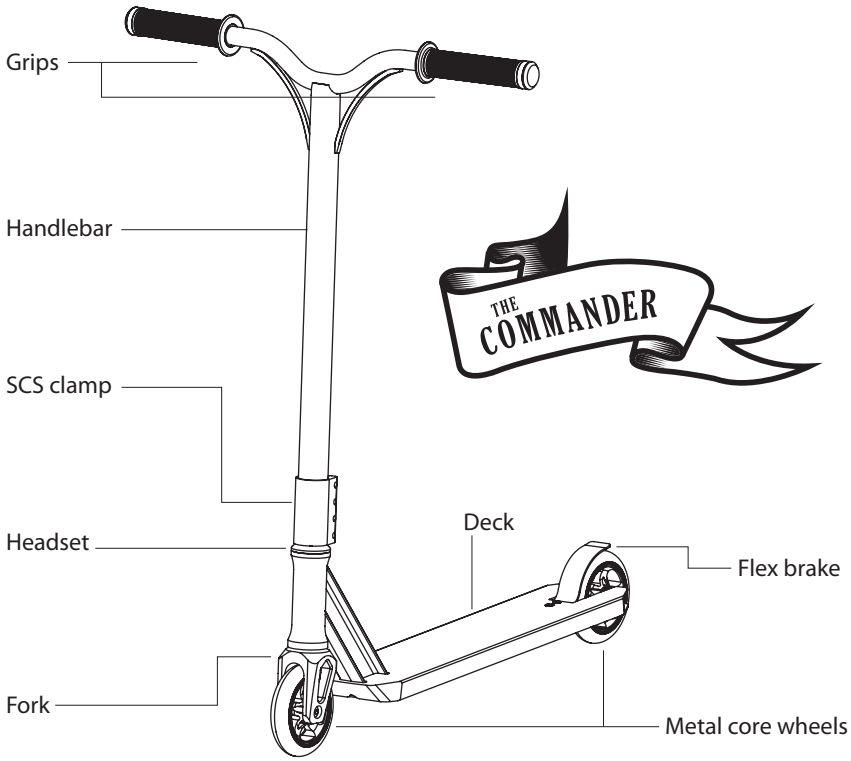

PARTS INSPECTION

Before you start, remove contents from box. Inspect the contents for scratches in the paint and/or dents that may have occurred during shipping. Your new scooter was partially assembled at our factory and there should not be any problems, even if the box has been bumped or dented enroute to you.

TOOL INCLUDED

Allen wrench
5mm

ASSEMBLY INSTRUCTIONS

1

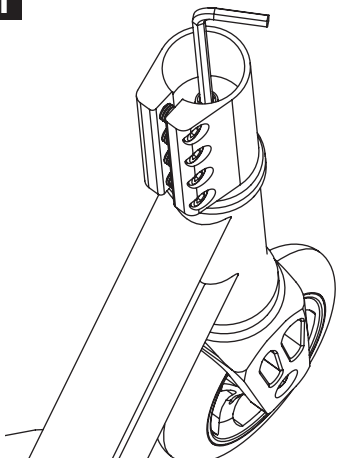

Before placing the bars, using a 5mm Allen wrench check that the SCS compression is tightened securely and the headset is not shaking.

2

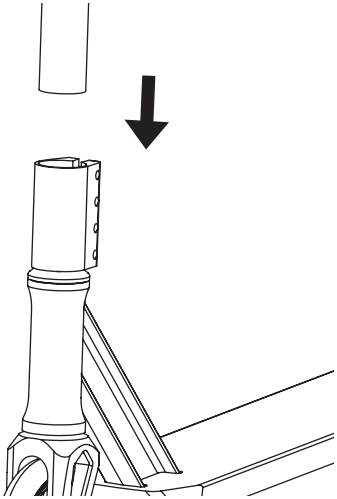

Loosen the bolts of the SCS clamp a bit. Push the bar into the SCS clamp until it can't go any further.

3

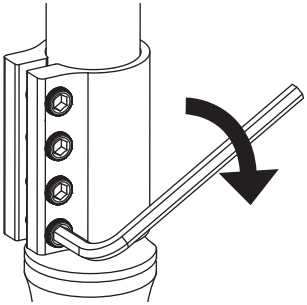

With the front wheel pointed straight ahead, the bars square to the wheel and the Dominator logo facing the front, Use the 6mm Allen wrench to tight the SCS clamp as shown. Tighten each bolt securely.

WARNING ⚠

Failure to properly install and tighten the collar clamp may cause the rider to lose control and fall. If you do not understand these instructions or the concept of “tighten securely” seek the assistance of a qualified mechanic.

SAFETY REMINDER

LOOSE PARTS

Check and secure all fasteners before every ride. Make sure the collar clamp is locked properly in place before riding.

REPLACEMENT PARTS

Replace worn or broken parts immediately. Visit our website www.dominatorscooters.com to see our range of spare parts.

SAFETY GEAR

Always wear proper protective equipment such as an approved safety helmet, elbow pads and kneepads. Always wear shoes (lace-up with rubber soles), never ride barefooted or in sandals, and keep shoelaces tied and out of the way of the wheels.

BE CAREFUL

You will see people on TV and maybe even people you know doing tricks and stunts. These are people who have been practicing on scooters for a very long time. Don't try something until you are ready. Avoid steep inclines and don't ride too fast, you can lose control and fall. Skateboard parks are not designed for scooters. Never ride in traffic or on the street and watch your surroundings for pedestrians, bikers, boarders and skaters.
Maintain a hold on the handlebars at all times.

Wheelies and other stunt-type riding reduces your ability to maneuver and control your scooter.
Take the necessary precautions, such as wearing appropriate protective gear and practice in an area safe for stunt riding and free from obstructions.

MAINTENANCE

COMPRESSION

If your bar starts to shake or move, it means that your compression needs to be tightened. Tighten as explained in the Assembly Instructions.

We also recommend to tight the compression just enough to keep the headset spinning smoothly, then tighten the bolts of the clamp well (no too tight though or it will strip). Be aware to check your compression (as all other bolts/axles) on a regular base.

CLEANING YOUR SCOOTER

Wipe with a damp cloth to remove dirt and dust.
Do not use industrial cleaners or solvents as they may damage the surface.

WHEELS AND BEARINGS

Under normal circumstances and conditions DSA Wheels and wheelbearings are maintenance free.
Do not allow water to penetrate the bearings as they will rust.
Lubricating your bearings can be done by taking off your wheels, using a dry cloth to remove dirt from your bearings and wheels, remove the bearing rubber seal carefully by using the tip of a sharp knife and lift the seal on the edge of the seal. Use 1 or 2 drops Teflon oil (PTFE) and press back the seal carefully. Your bearings will make some noise just after cleaning but it will go away after a short notice.

LIMITED WARRANTY

Dominator SIX MONTH LIMITED WARRANTY

For a period of six (6) months from the date of purchase by the original Purchaser, Dominator® warrants its products to be free from defects in material and workmanship. This warranty is not transferable to any subsequent owner. This warranty does not cover I) normal wear and tear; II) improper assembly; III) failure to perform or improper maintenance; IV) the installation of components, parts, or accessories not provided by Dominator®; V) damage or failure due to accident, misuse, abuse, or neglect; VI) labor charges for part replacement.
In event of a warranty claim, Purchaser must return the Dominator® product to the Dealer from whom the product was purchased with proof of purchase.

LIMITATION OF REMEDY

The purchaser's sole remedy shall be the repair or replacement of defective parts and is at the discretion of the manufacturer, the purchaser must retain evidence of proof of purchase from an authorized dealer. Shipping to and from the dealer and or repair facility is the sole responsibility of the customer.

DISCLAIMER OF IMPLIED WARRANTIES

Any and all implied warranties, including those of mechantability and/or fitness for a particular purpose are hereby expressly disclaimed.

LIMITATION OF LIABILITY

Under no circumstance will Dominator® or any seller of its products be liable for any special, incidental or consequential loss and/or damages.
THIS IS DOMINATOR®'s SOLE AND EXCLUSIVE WARRANTY

Questions? Our freestyle scooter experts are here to help.
info@dominatorscooters.com
sales@eastwardsports.com

Dominator

SCOOTER ACCESSORIES

Eastward Sports Group
390 Meyer Circle
92879 Corona (CA)
USA

WWW.DOMINATORSCOOTERS.COM